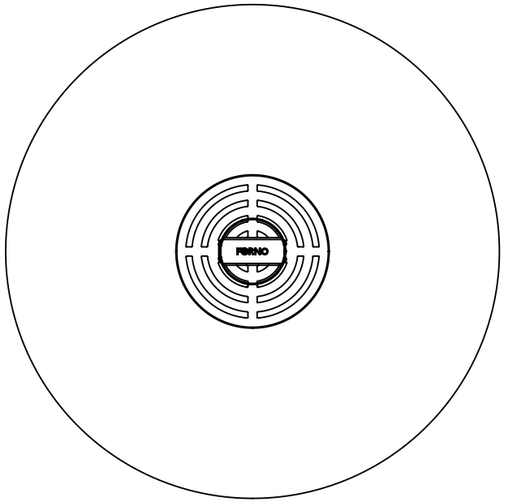



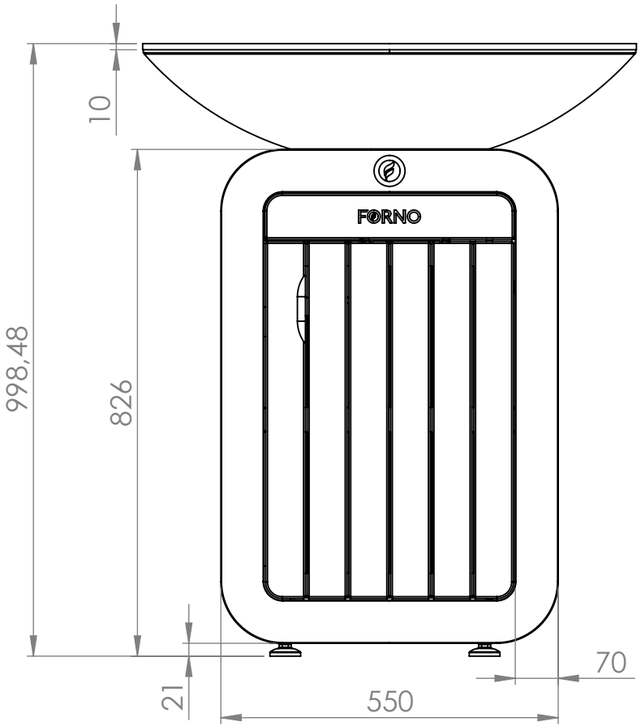

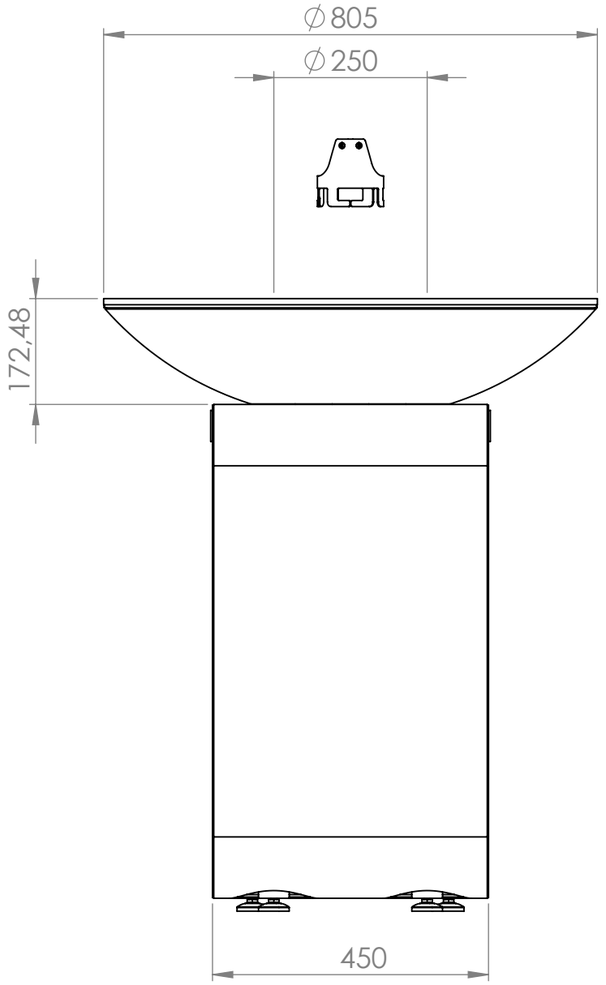

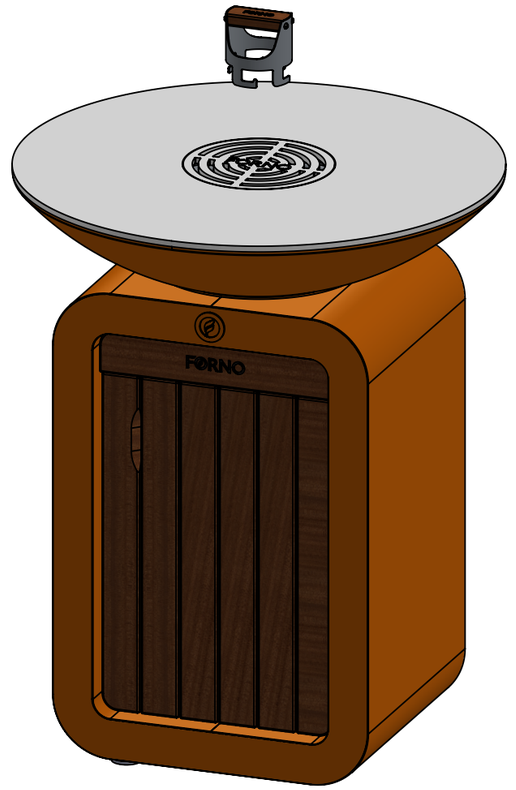

		DATE	
DRAWN	Luuk van den Heuvel	21-1-2026	
REVISION	Dorus Bannenberg	29-10-2026	

FORNO IGNITE YOUR NATURE
Liessentstraat 4, 5405 AG Uden (NL).
t 0031 (0)413 - 27 41 68.
e info@forno.nl, i www.forno.nl

Color:	-	Mass(kg): 134.70	SCALE:1:10

TITLE: FSP.800

Drawing. FSP.800 A3

SHEET 1 OF 66