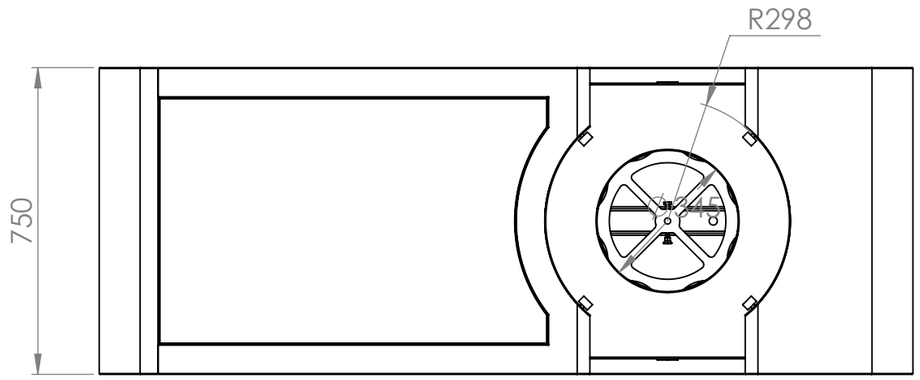

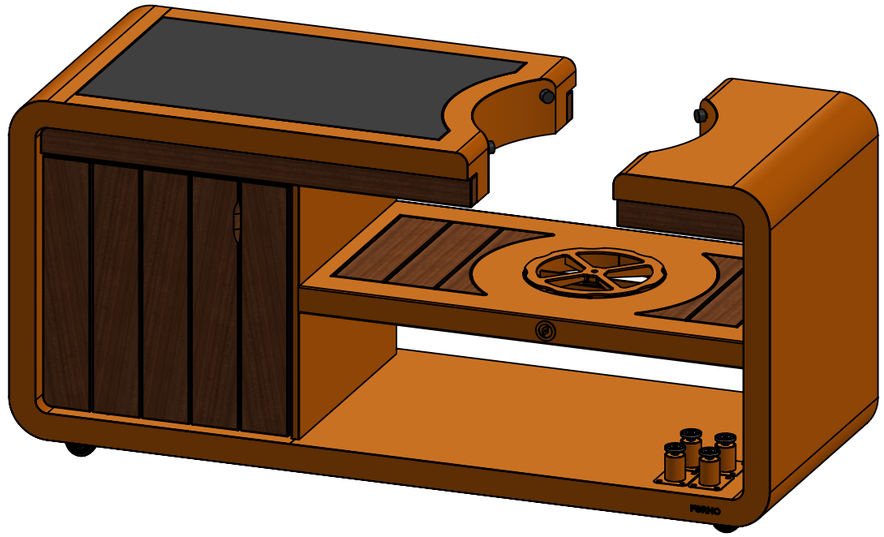

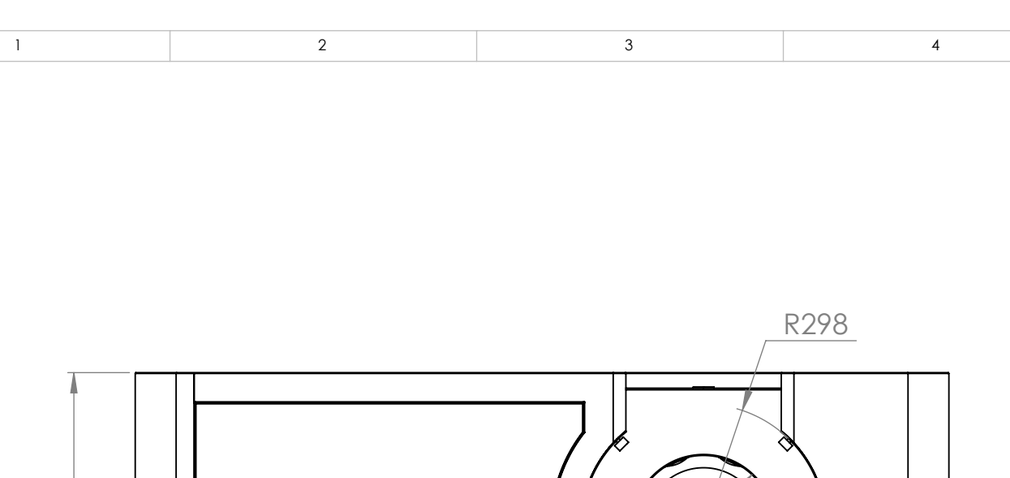

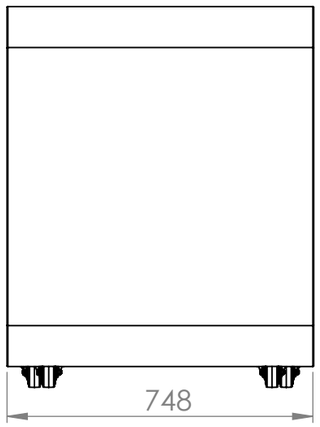

		DATE	
DRAWN	Luuk van den Heuvel	28-10-2026	
REVISION	Dorus Bannenberg	28-10-2026	

TITLE: FKS.2000

FORNO
IGNITE YOUR NATURE
Liessentstraat 4, 5405 AG Uden (NL).
t 0031 (0)413 - 27 41 68.
e info@forno.nl, i www.forno.nl

Drawing. FKS.2000 A3

Color: - Mass(kg): 209.86 SCALE:1:15 SHEET 1 OF 59