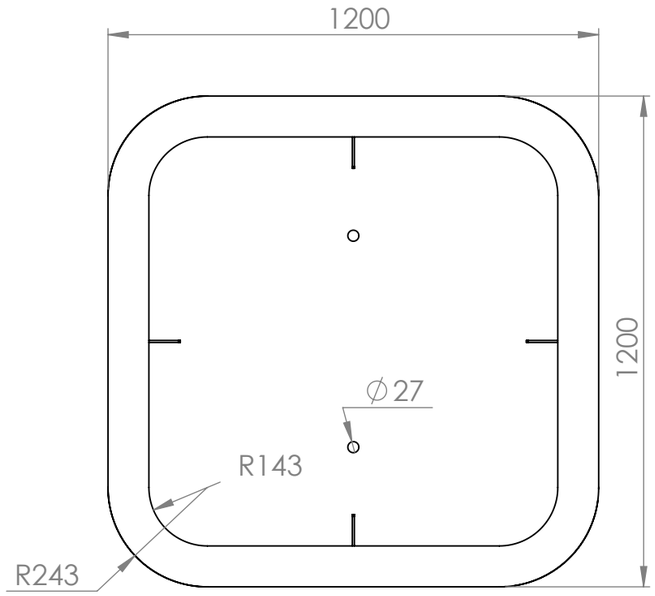

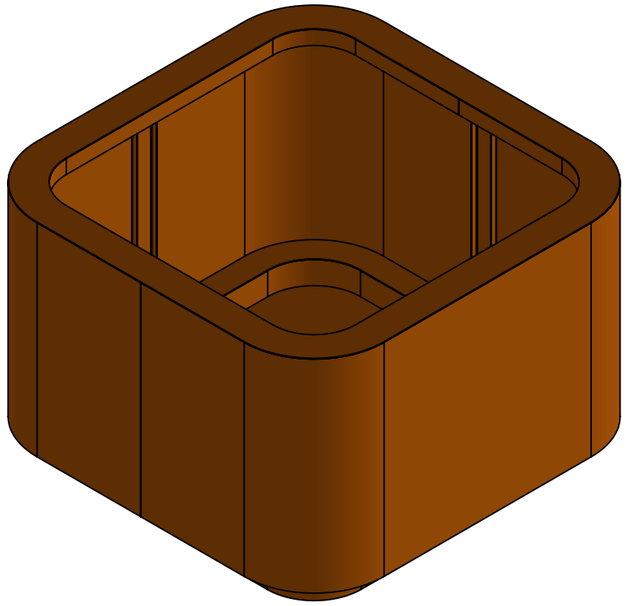

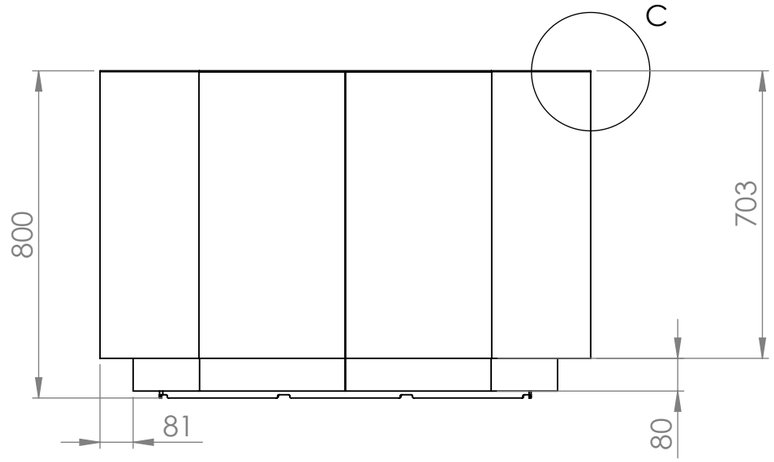

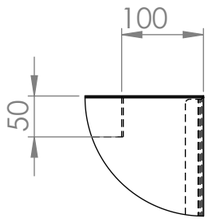

DETAIL C
SCALE 2 : 15

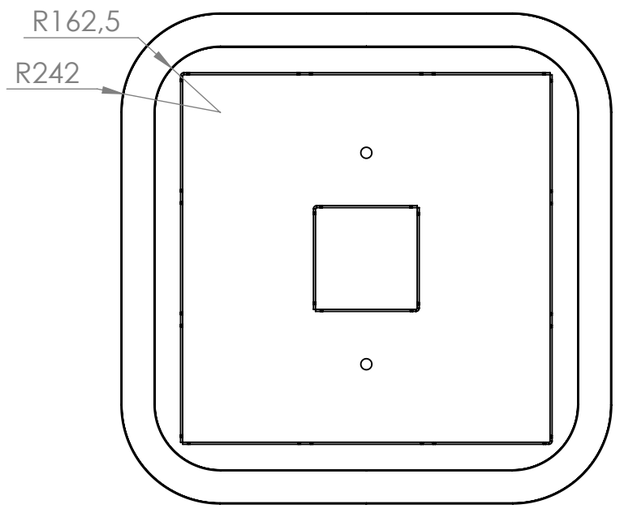

		DATE	
DRAWN	Luuk van den Heuvel	3-9-2024	
REVISION			

ADEZZ
DESIGN TO GROW

Liessentstraat 4, 5405 AG Uden (NL).
t 0031 (0)413 - 27 41 68.
e info@adezz.com, i www.adezz.com

TITLE:
2mm Corten

Drawing.
CRO.4

A3

Color: -
Mass (kg): **93.00**
SCALE:1:15
SHEET 1 OF 12