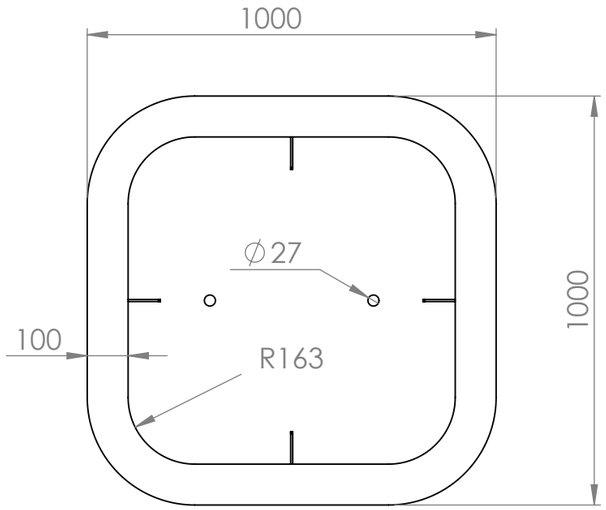

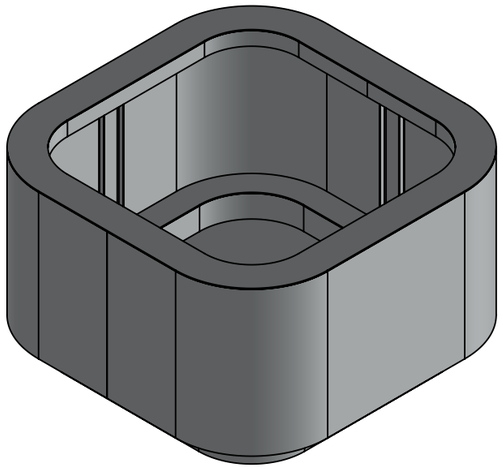

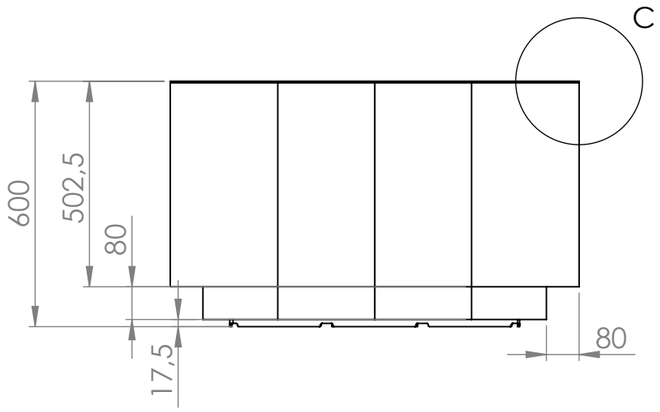

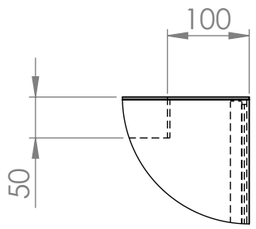

DETAIL C
SCALE 2 : 15

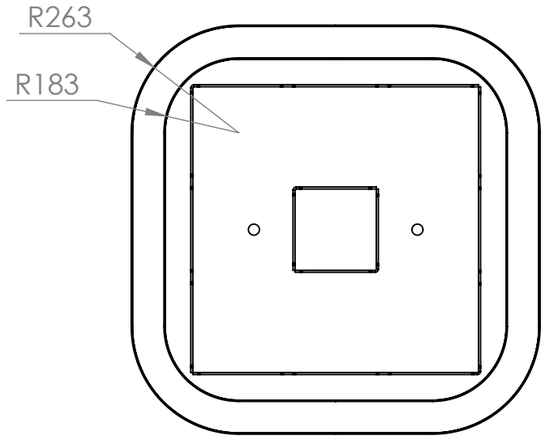

		DATE
DRAWN	Luuk van den Heuvel	3-9-2024
REVISION		

ADEZZ
DESIGN TO GROW

Liessentstraat 4, 5405 AG Uden (NL).
t 0031 (0)413 - 27 41 68.
e info@adezz.com, i www.adezz.com

TITLE:
3mm Aluminum

Drawing.
ARO.2

A3

Color: -

Mass (kg): **30.71**

SCALE:1:15

SHEET 1 OF 12