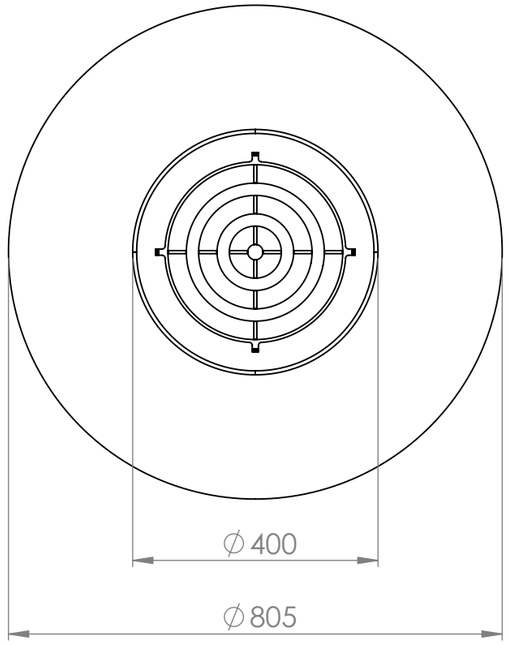

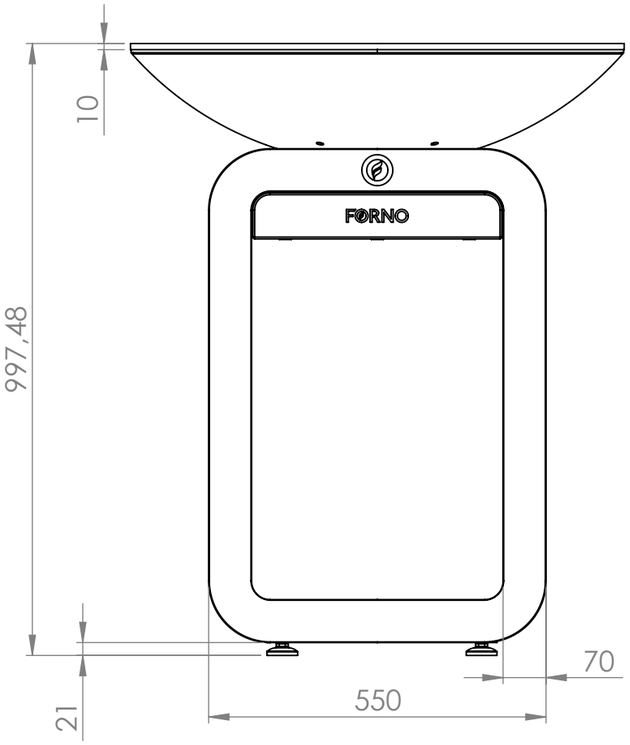

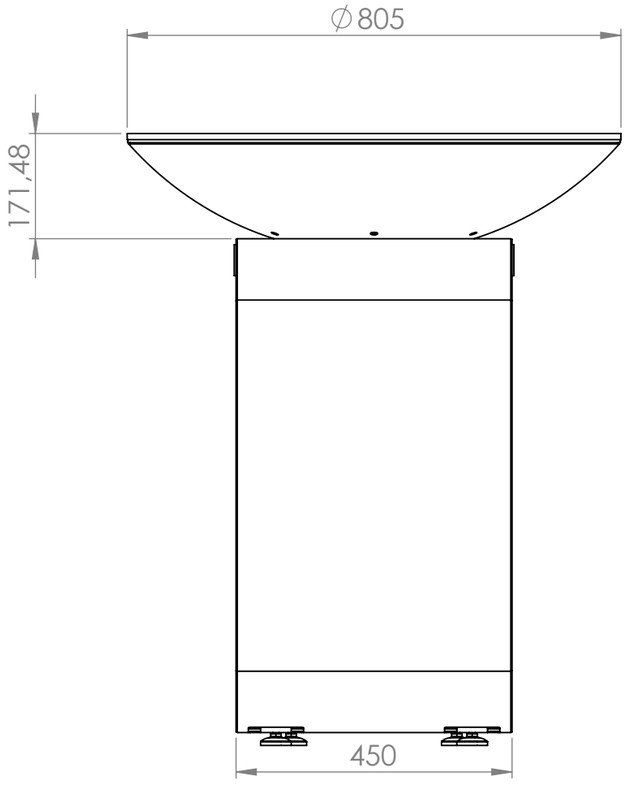

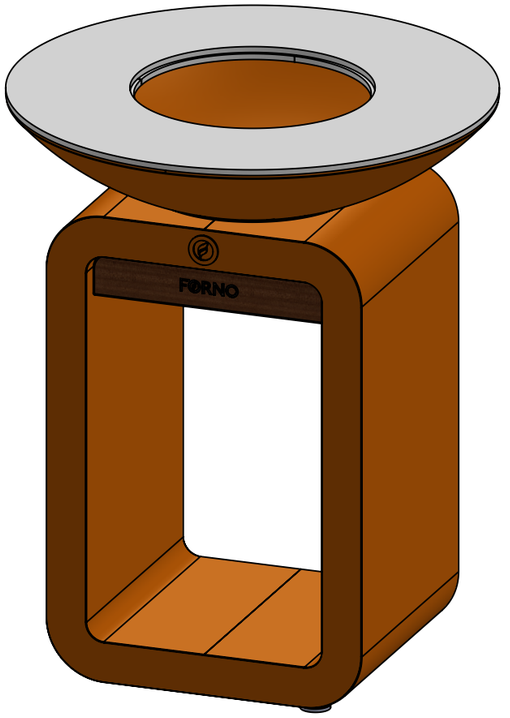

		DATE	
DRAWN	Luuk van den Heuvel	12-10-2026	
REVISION	Dorus Bannenberg	28-10-2026	

TITLE: FSH.800

FØRNO
IGNITE YOUR NATURE

Liessentstraat 4, 5405 AG Uden (NL).
t 0031 (0)413 - 27 41 68.
e info@forno.nl, i www.forno.nl

Drawing. FSH.800 | A3

Color: - | Mass(kg): 108.51 | SCALE:1:10 | SHEET 1 OF 33