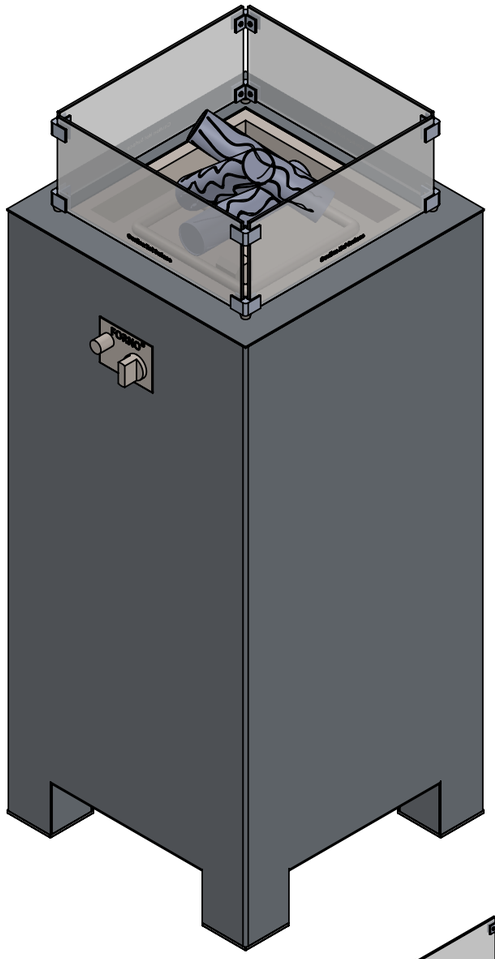

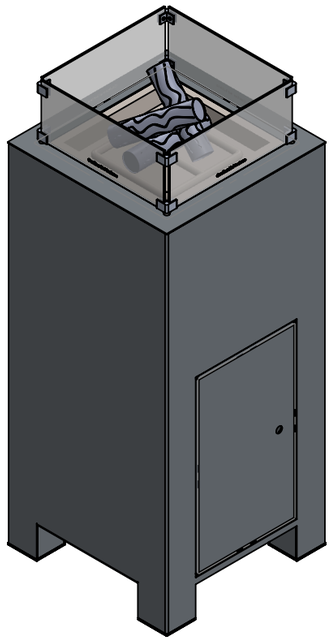

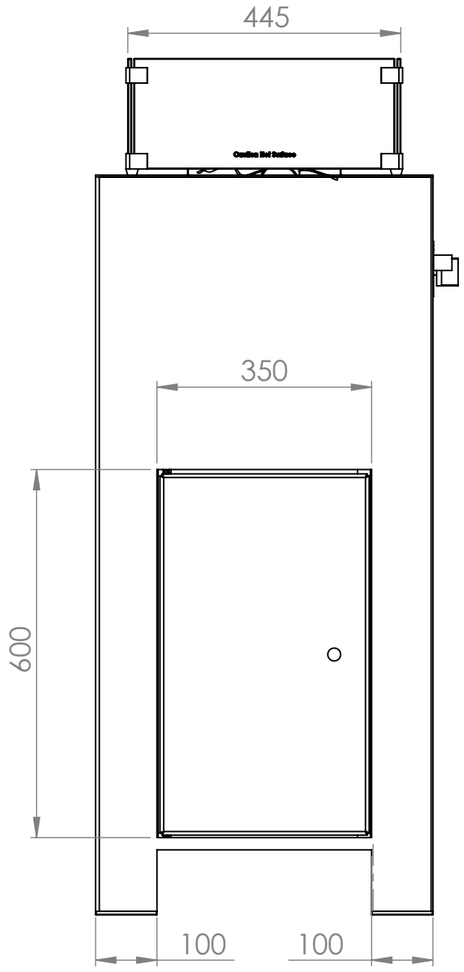

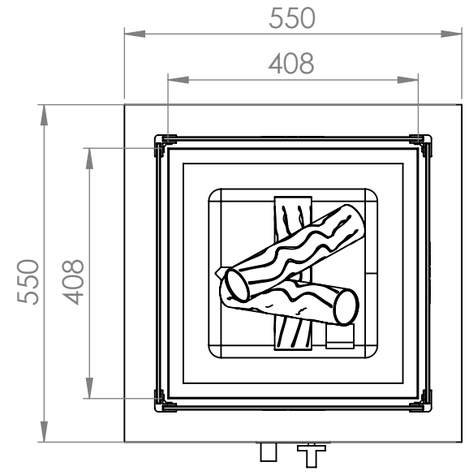

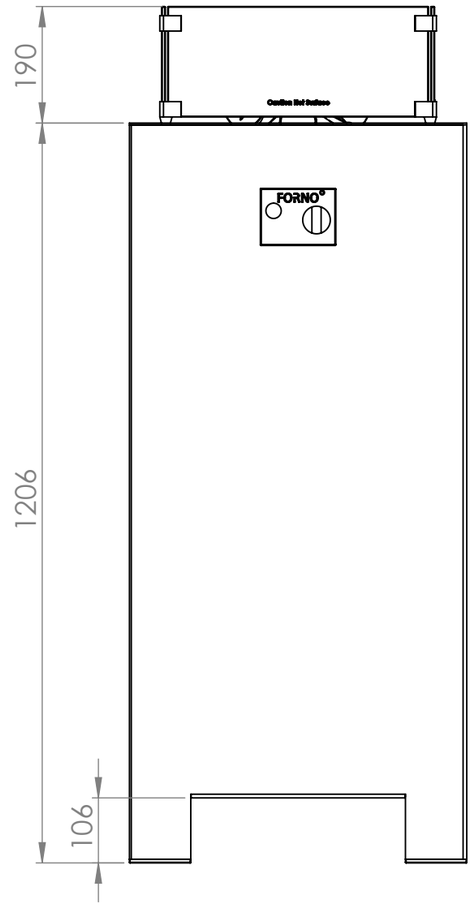

		DATE
DRAWN	Luuk van den Heuvel	19-11-2025
REVISION		

FORNO
IGNITE YOUR NATURE

Liessentstraat 4, 5405 AG Uden (NL).
t 0031 (0)413 - 27 41 68.
e info@forno.nl, i www.forno.nl

Color: -

TITLE:

BRANN- VBA4

Drawing. BRANN- VBA4

A3

SCALE:1:10

SHEET 1 OF 19