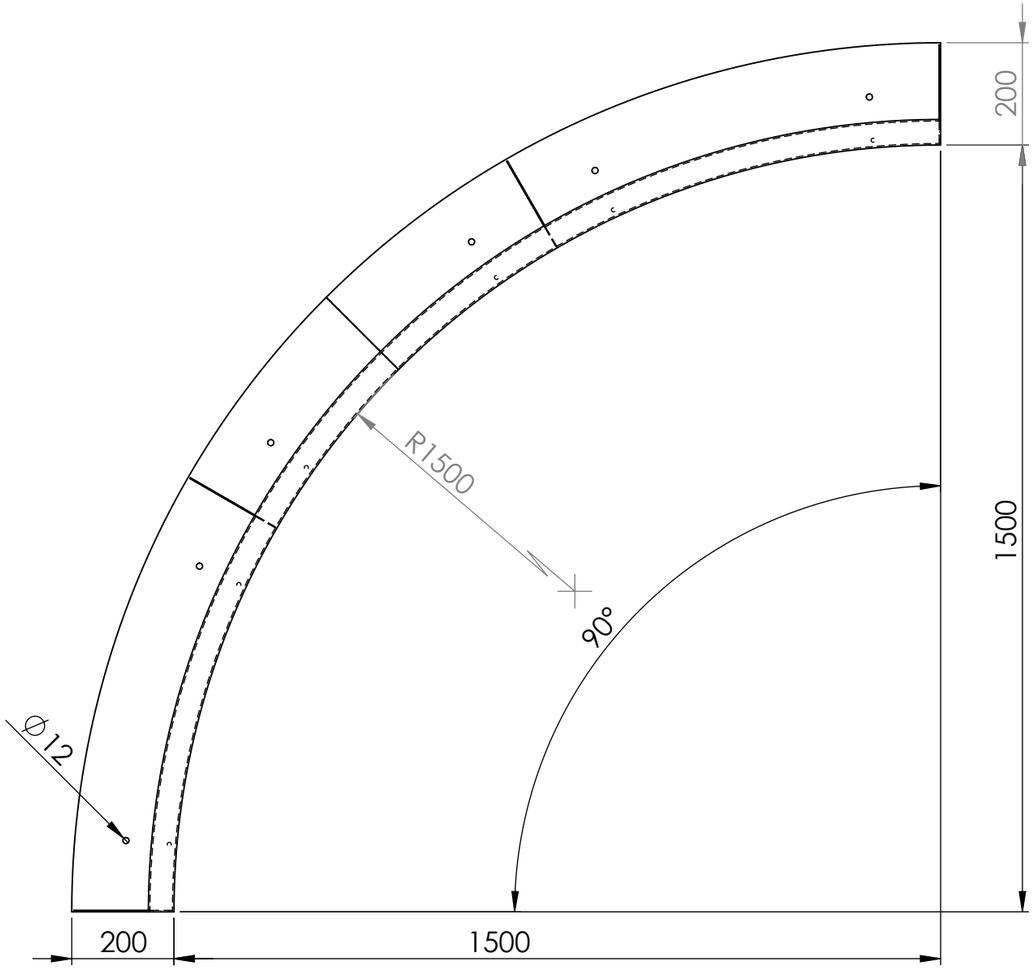

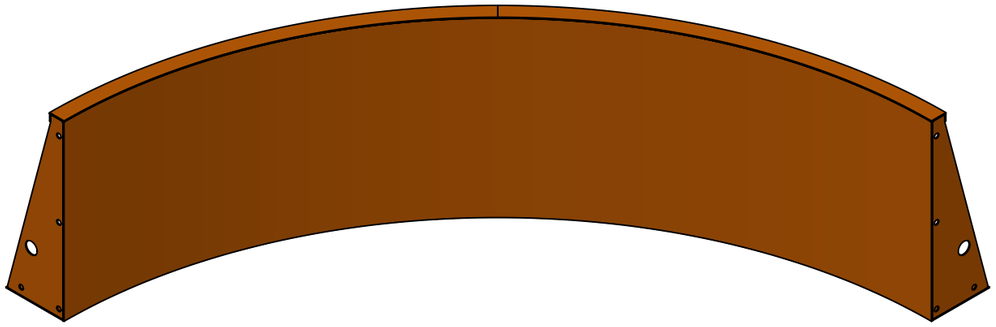

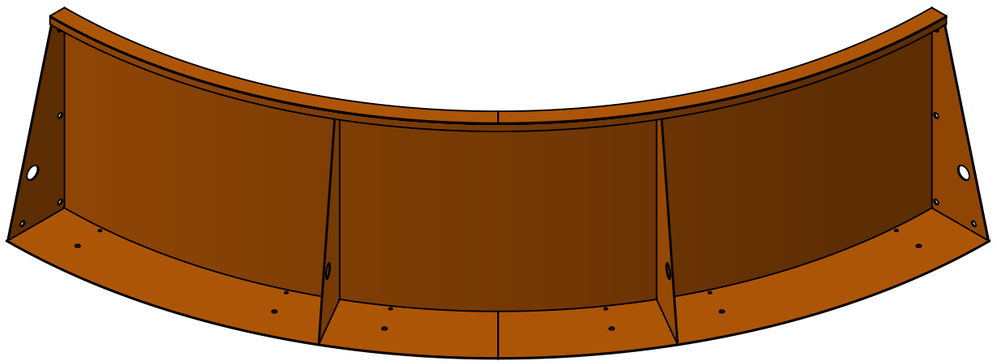

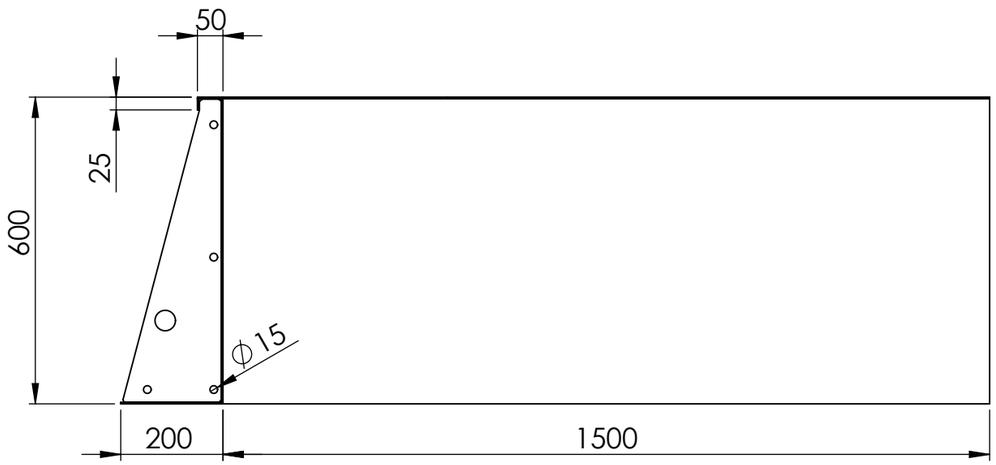

		DATE
DRAWN	Luuk van den Heuvel	20-11-2019
REVISION	Luuk van der Heuvel	29-3-2024

ADEZZ
DESIGN TO GROW
Liessentstraat 4, 5405 AG Uden (NL).
t 0031 (0)413 - 27 41 68.
e info@adezz.com, i www.adezz.com

TITLE:

Corten 3mm

Drawing.

CRCN3_600_1500

A3

Color: -

Mass (kg): **53,11**

SCALE:1:12

SHEET 1 OF 8