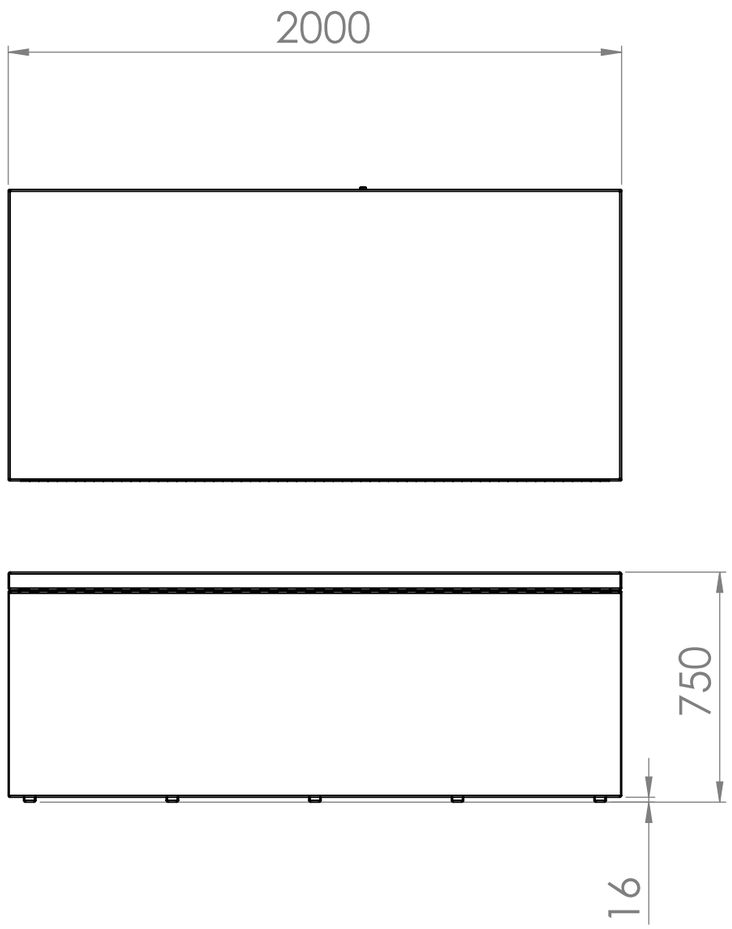

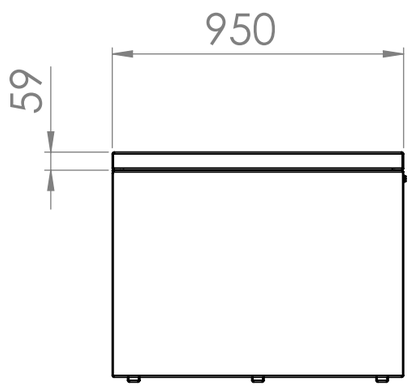

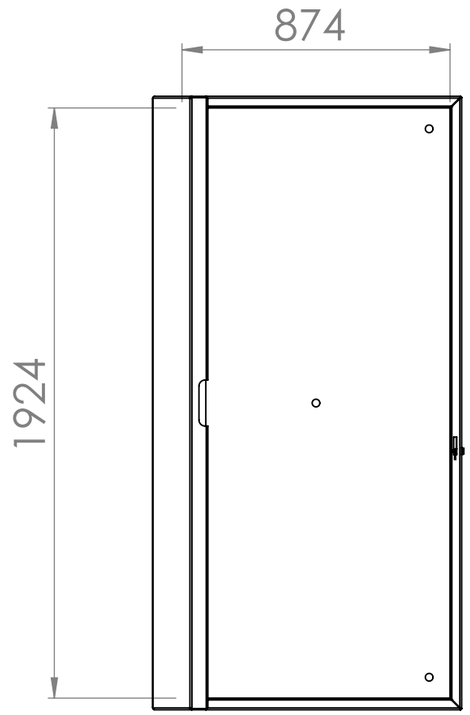

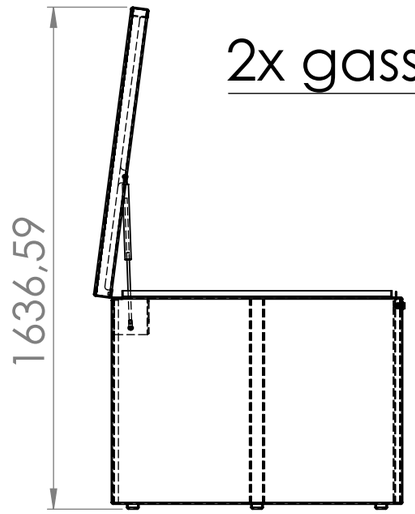

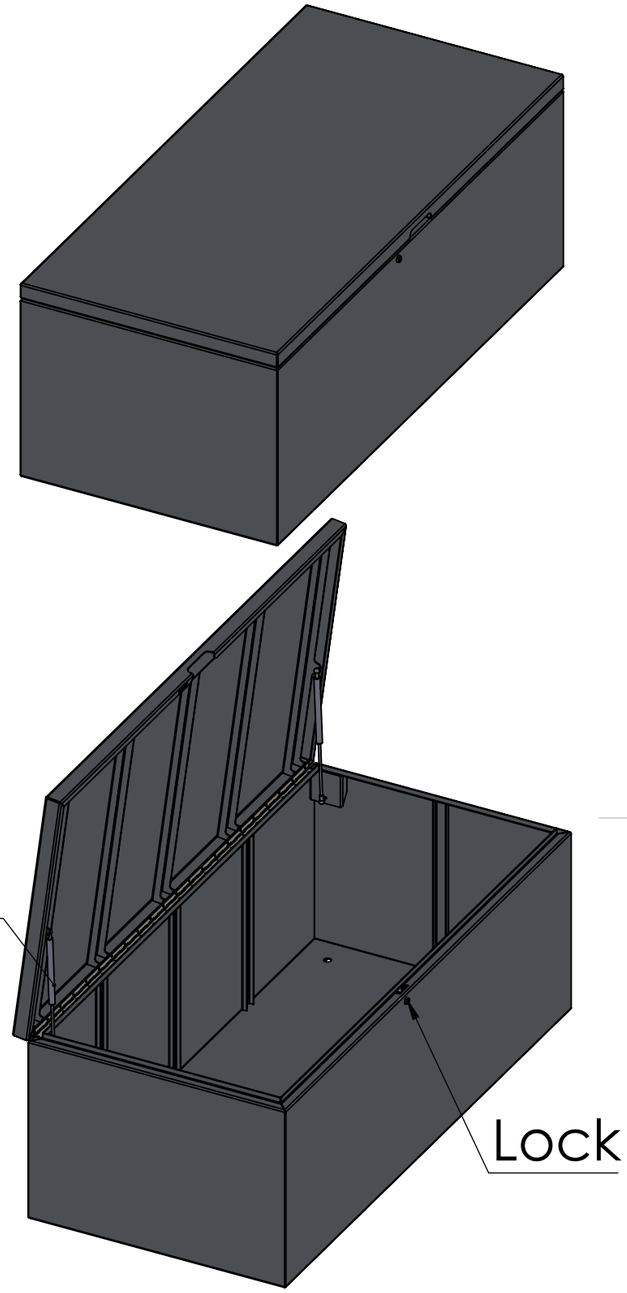

		DATE	
DRAWN	Luuk van den Heuvel		
REVISION			

ADEZZ®
WE PRODUCE GARDEN PRODUCTS FOR PROFESSIONALS

Liessentstraat 4, 5405 AG Uden (NL).
t 0031 (0)413 - 27 41 68.
e info@adezz.com, i www.adezz.com

TITLE:

3mm Aluminum

Drawing. STB200_

A3

Color:

Mass (kg): **80.00**

SCALE:1:20

SHEET 1 OF 22