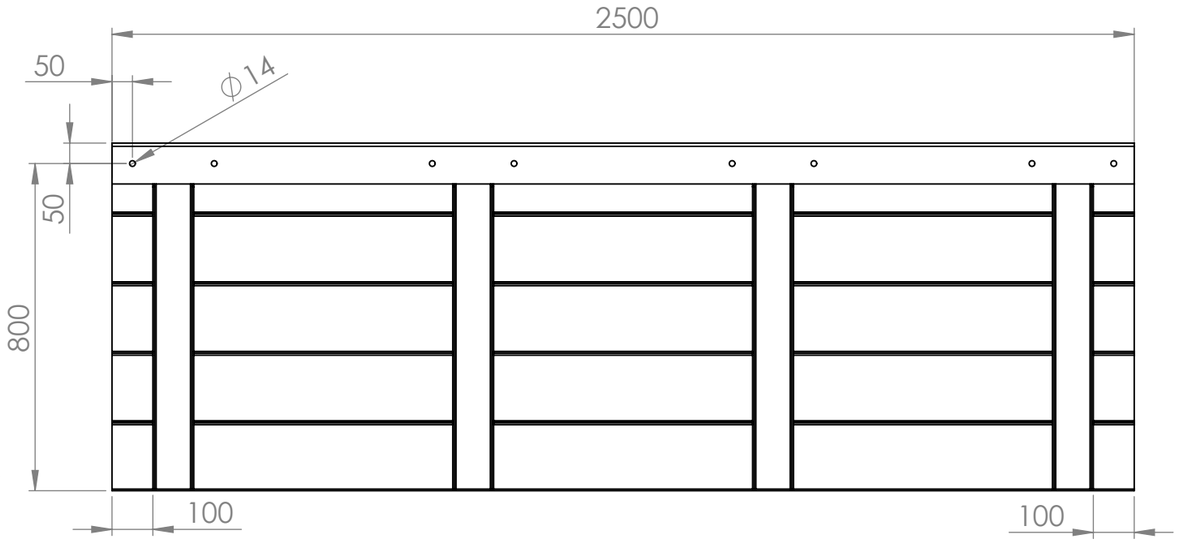

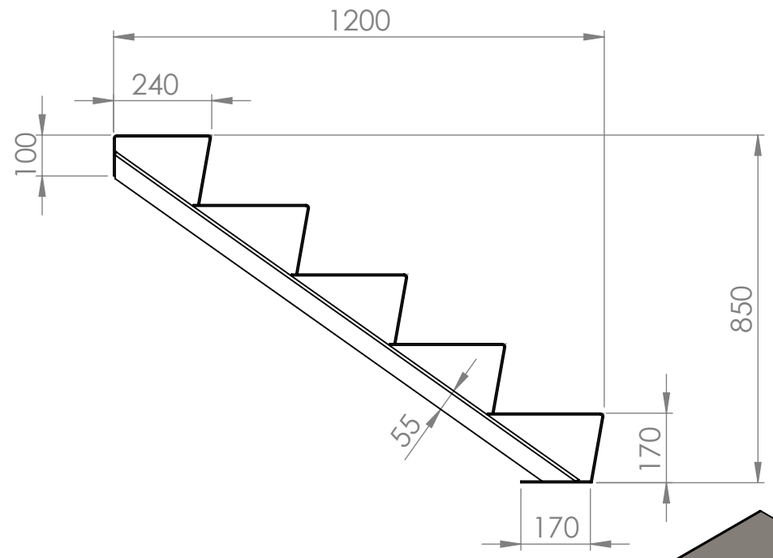

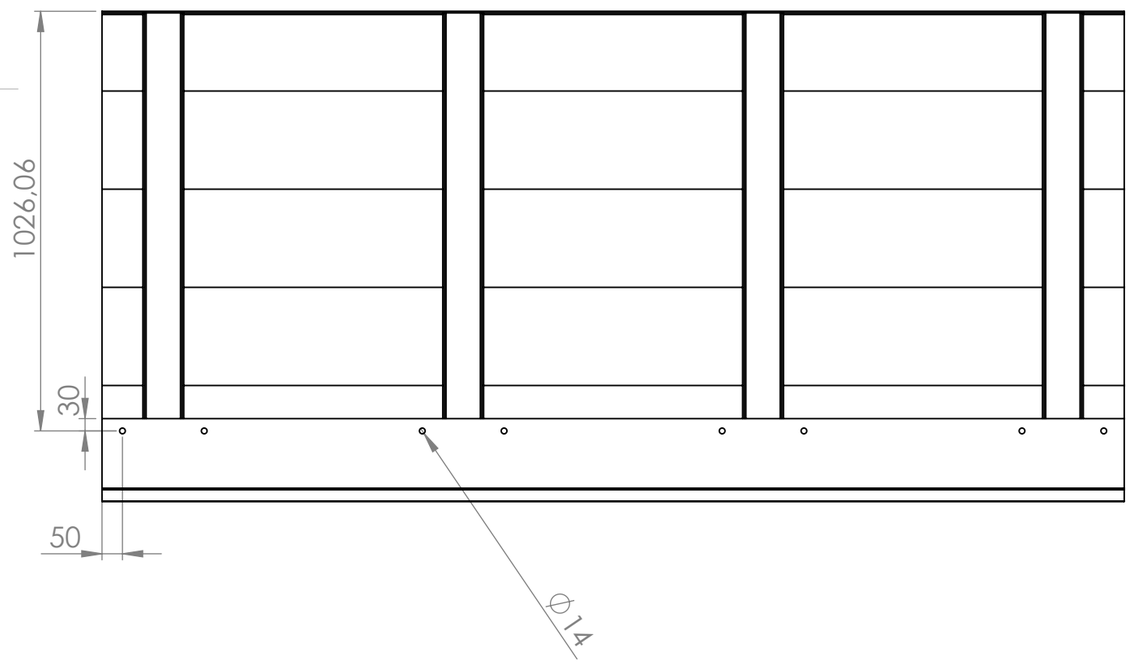

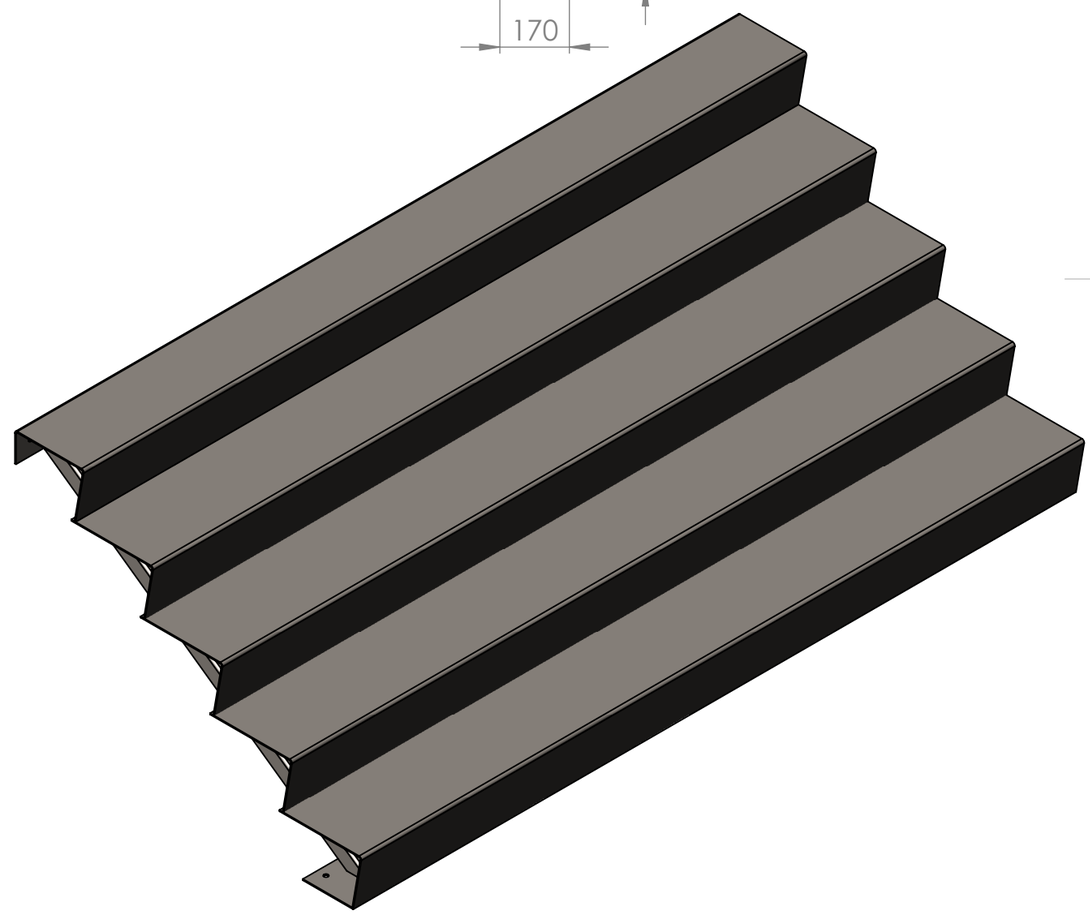

		DATE	
DRAWN	Luuk van den Heuvel	25-5-2022	
REVISION			

ADEZZ®
WE PRODUCE GARDEN PRODUCTS FOR PROFESSIONALS

Liessentstraat 4, 5405 AG Uden (NL).
t 0031 (0)413 - 27 41 68.
e info@adezz.com, i www.adezz.com

TITLE:

4mm Aluminum

Drawing.

AST5.5

A3

Color: -

Mass (kg): **78.05**

SCALE:1:15

SHEET 1 OF 6