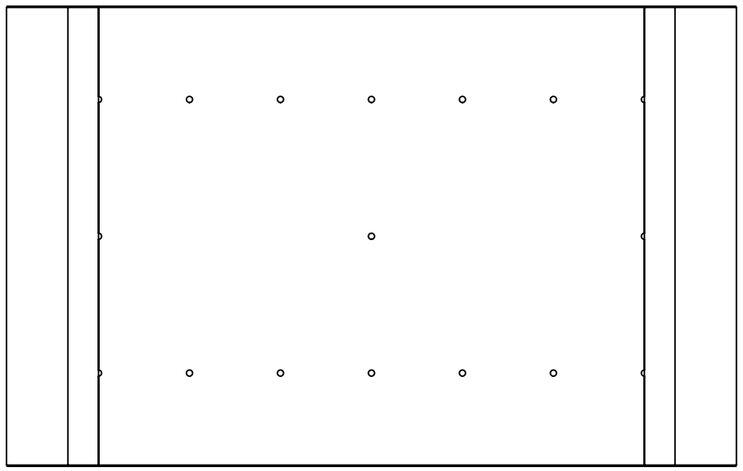

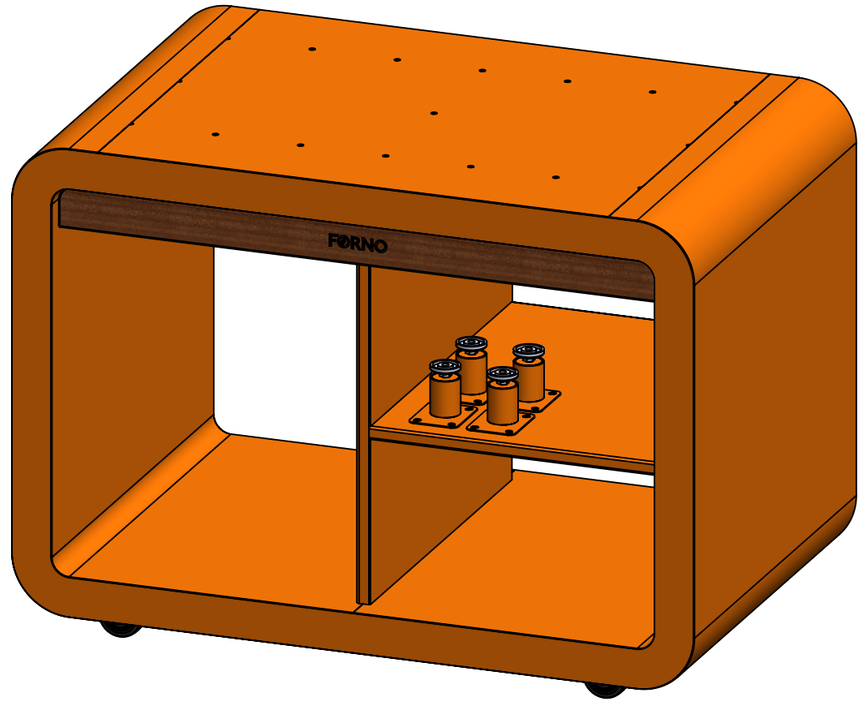

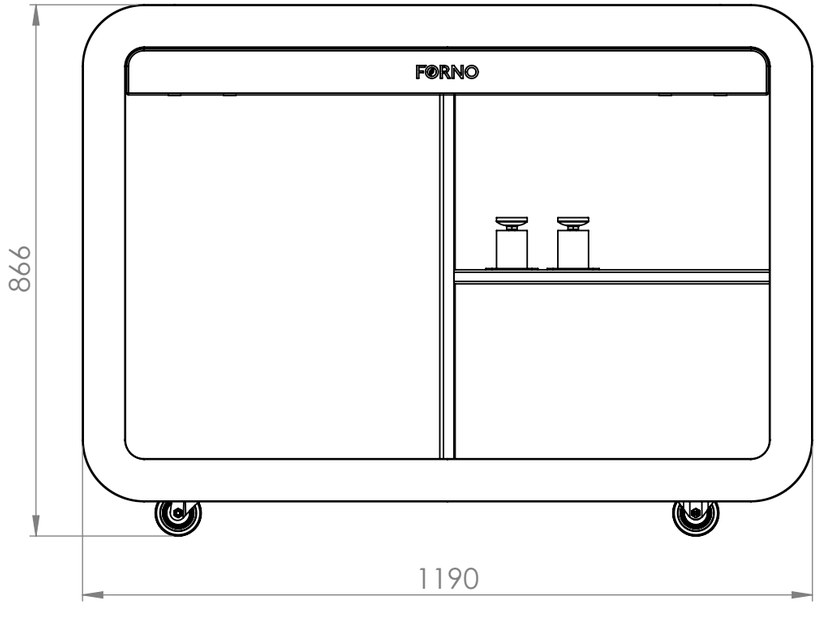

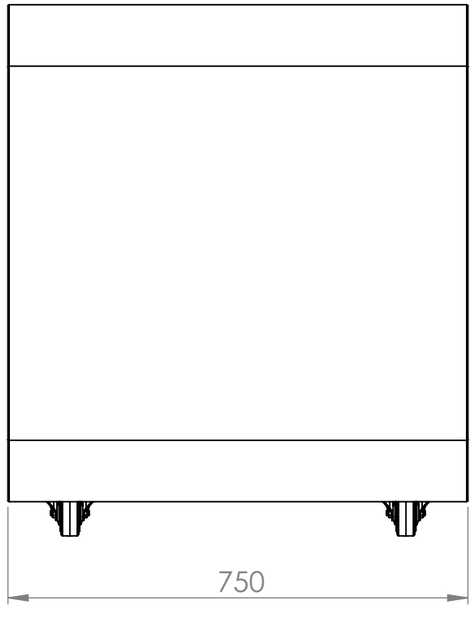

		DATE	
DRAWN	Luuk van den Heuvel	24-3-2025	
REVISION	Dorus Bannenberg	27-10-2026	

TITLE: FDS.1200

FØRNO
IGNITE YOUR NATURE

Liessentstraat 4, 5405 AG Uden (NL).
t 0031 (0)413 - 27 41 68.
e info@forno.nl, i www.forno.nl

Drawing. FDS.1200 A3

Color: - Mass(kg): 141.77 SCALE:1:10 SHEET 1 OF 25